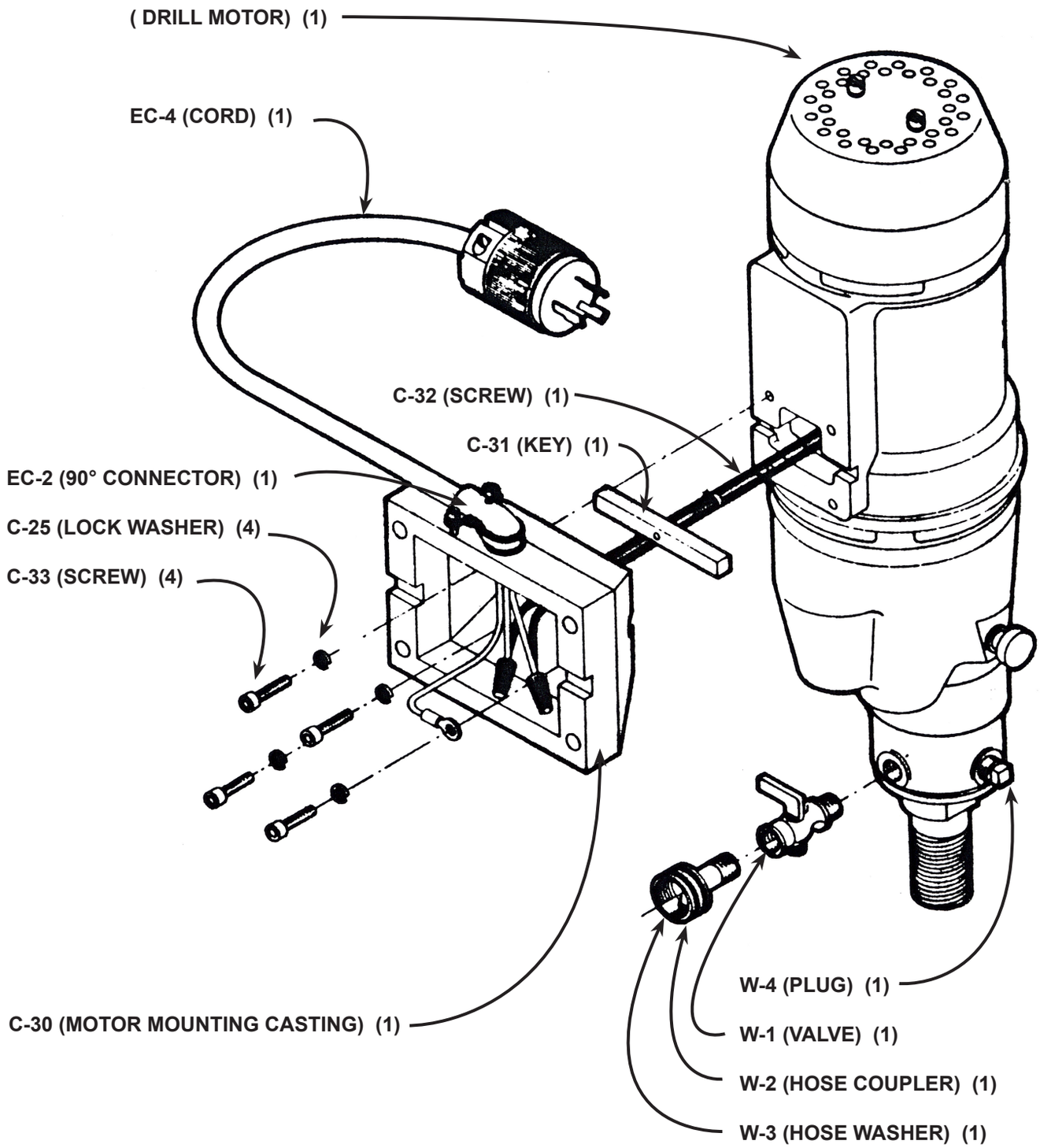
(DRILL MOTOR) (1)
EC-4 (CORD) (1)
C-32 (SCREW) (1)
C-31 (KEY) (1)
EC-2 (90° CONNECTOR) (1)
C-25 (LOCK WASHER) (4)
C-33 (SCREW) (4)
C-30 (MOTOR MOUNTING CASTING) (1)
W-4 (PLUG) (1)
W-1 (VALVE) (1)
W-2 (HOSE COUPLER) (1)
W-3 (HOSE WASHER) (1)

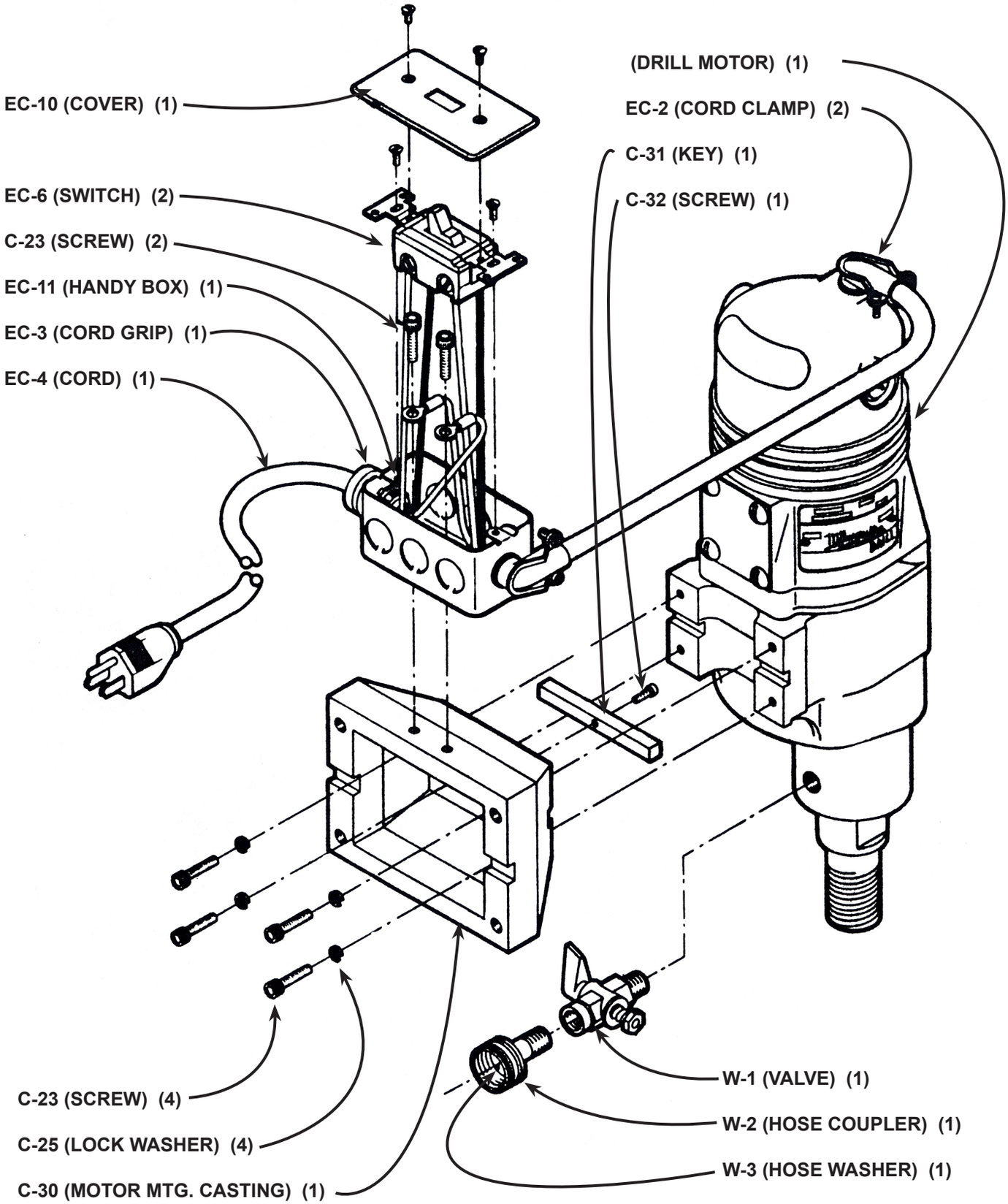
EC-10 (COVER) (1)
EC-6 (SWITCH) (2)
C-23 (SCREW) (2)
EC-11 (HANDY BOX) (1)
EC-3 (CORD GRIP) (1)
EC-4 (CORD) (1)
(DRILL MOTOR) (1)
EC-2 (CORD CLAMP) (2)
C-31 (KEY) (1)
C-32 (SCREW) (1)
C-23 (SCREW) (4)
C-25 (LOCK WASHER) (4)
C-30 (MOTOR MTG. CASTING) (1)
W-1 (VALVE) (1)
W-2 (HOSE COUPLER) (1)
W-3 (HOSE WASHER) (1)